Stegne 21C, 1000 Ljubljana, Slovenia – EU
E-mail: grega.flander@ediseja21.com
Tel: 00 386 51 643 411
www.ediseja21.com

TPI - TAP POSITION INDICATOR

FEATURES

- 6x digital inputs BCD
- 24 V, 48 V-60 V, 110 V-125 V, 220 V DC, 230 V AC
- Panel mount
- Enclosure size 97 mm(W) x 50 mm(H) x 134 mm(D)
- Up to 39 positions

DESCRIPTION

TPI is tap changer position indicator. It displays positon on two 1" (25 mm) high displays up to 39 positions. Device can obtain information via 6x digital inputs (BCD coding).
Power supply and digital inputs are made for standard substation voltages; 24 V DC, 48 V-60 V DC, 110 V-125 V DC, 220 V DC and 230 V AC.
TPI is intended for mounting into panel.

TYPICAL APPLICATION:

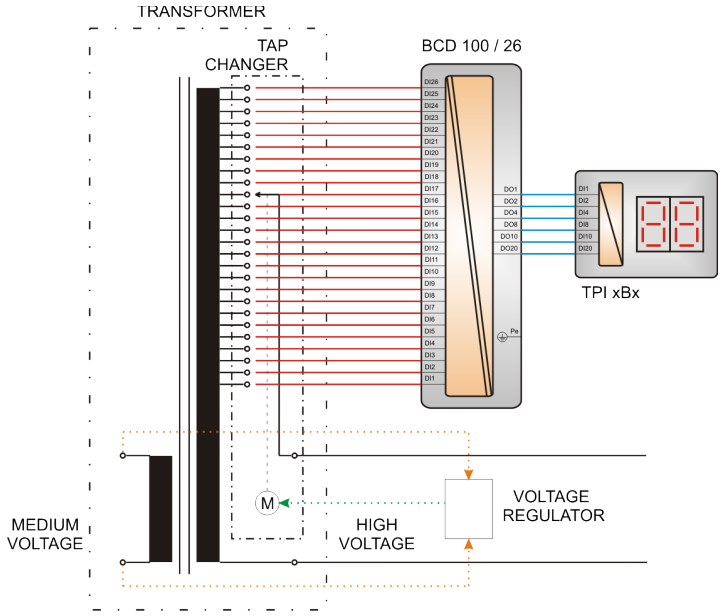

DIMENSIONS:

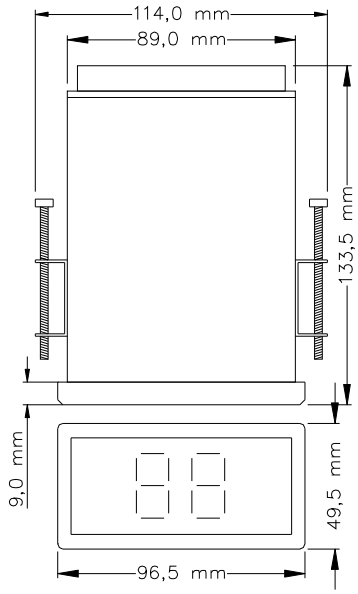

SCHEMATICS:

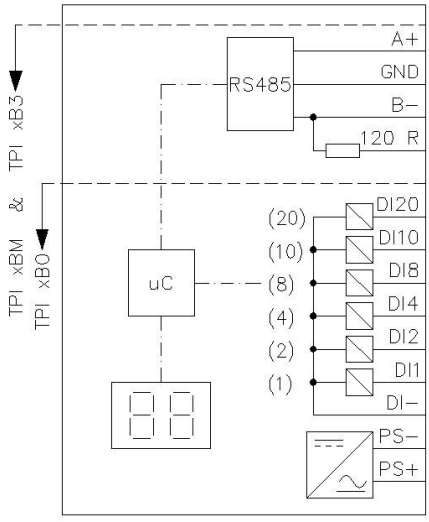

ORDERING:

TPI □ □ □

Digital inputs and power supply voltage:

24 V DC*	1
48 V-60 V DC *	2
110 V-125 V DC	3
220 V DC	4
230 V AC	5

Inputs:

6x digital inputs BCD	B
20 mA analog input*	A
Resistance measurement*	R

Communication:

None	0
RS485, ModBus protocol*	M
RS485, IEC 60870-5-103 protocol*	3

* in development